Conceptual Design of UAV for Titan Exploration

Lillia Smith, University of Portland

Summer 2019 Aeromechanics Intern

NASA Ames Research Center

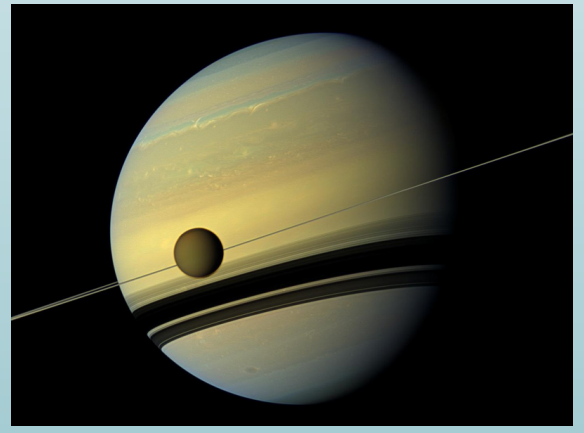

New Frontiers Program: Dragonfly

Why Titan?

- Titan exhibits attributes more similar to Earth than any other body in the solar system.
  - Can show us how life might have come about on Earth
- UV light breaks down nitrogen and methane molecules, and they recombine to form organic molecules, which are the basis of life itself.

About Titan

- Atmosphere is 95% Nitrogen, <5% Methane
- Reservoirs of liquid methane
- Hydrocarbon cycle similar to Earth's water cycle
- Atmospheric density is 5.4 kg/m^3
- Only moon with a thick atmosphere
- Surface gravity is 1.35 m/s^2

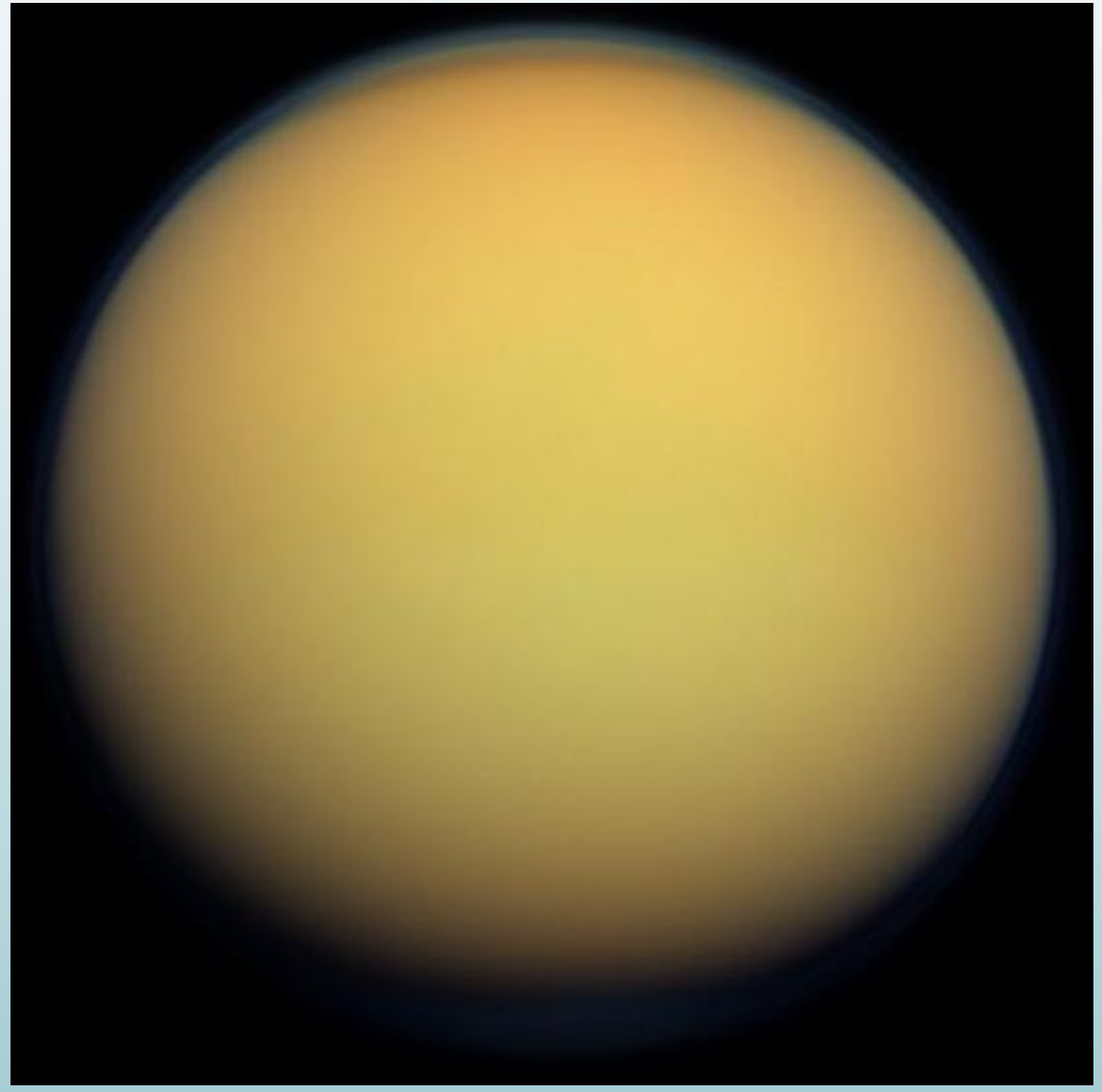

Mission Requirements

- Perform aerial and deep sea mapping
- Amphibious
- Collect and analyze samples for biochemical assessment
- Measure change in chemical composition
- Track current behavior of liquid bodies
- Examine differences between lakes and seas

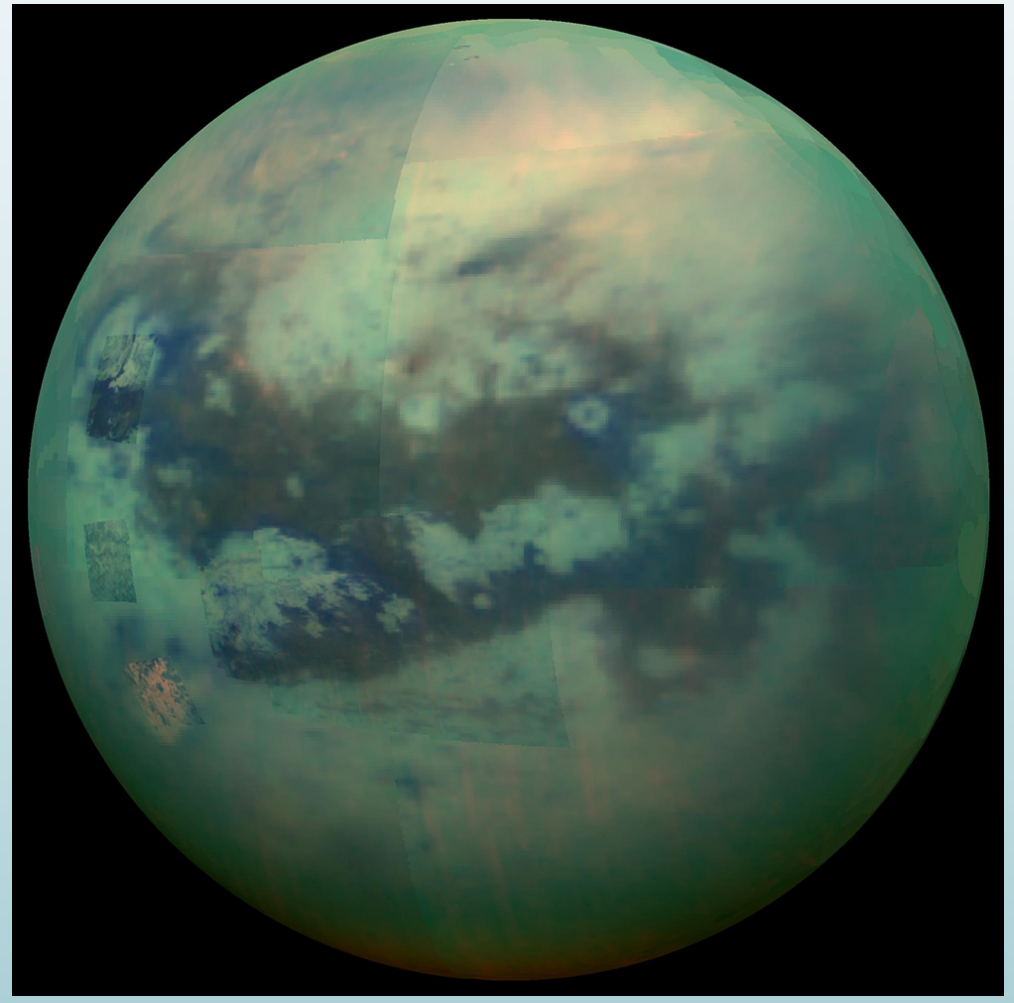

Vehicle System Requirements

- Direct transmission of data to Earth
- One onboard Multi-Mission Radioisotope Thermoelectric Generator (MMRTG) with periodic charging of lithium-ion battery
- Take off and land on solid and liquid surfaces
- Different speed of rotors for the two different environments

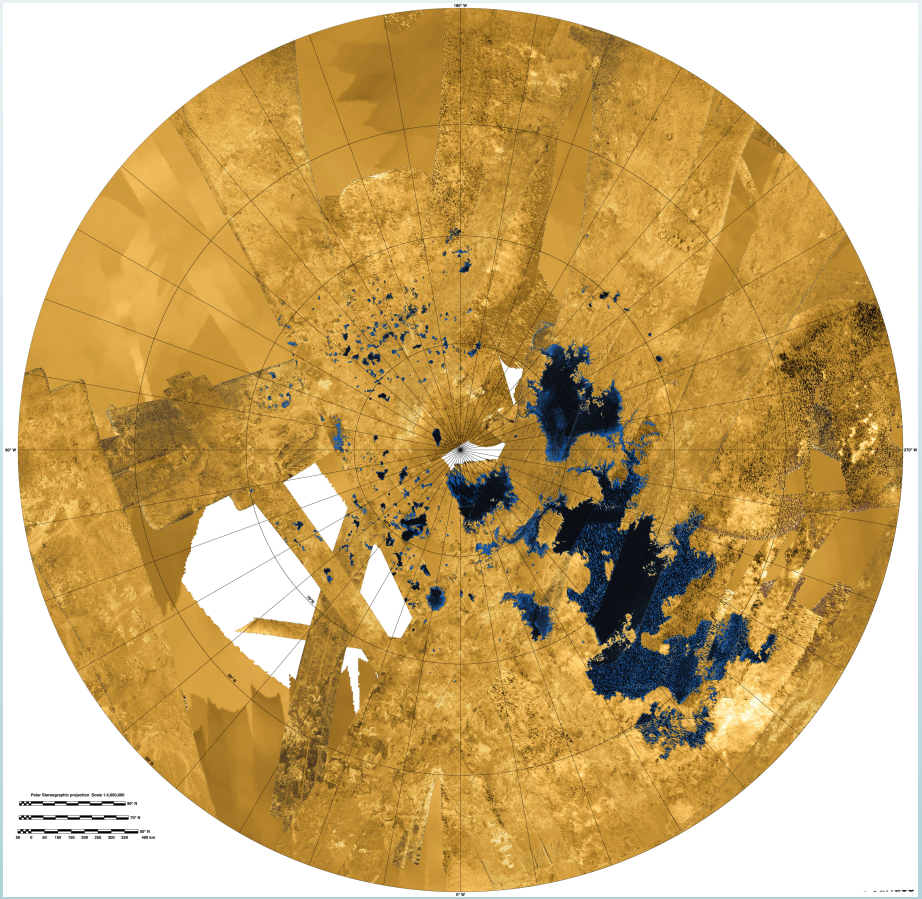

Drafts of UAV

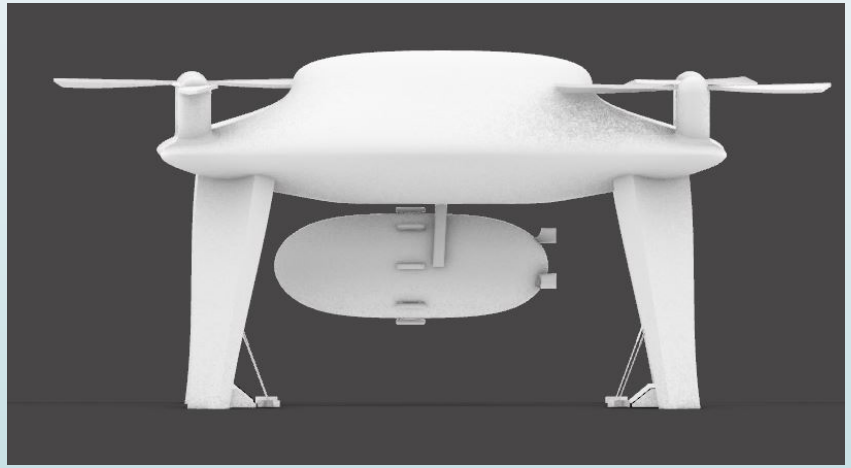

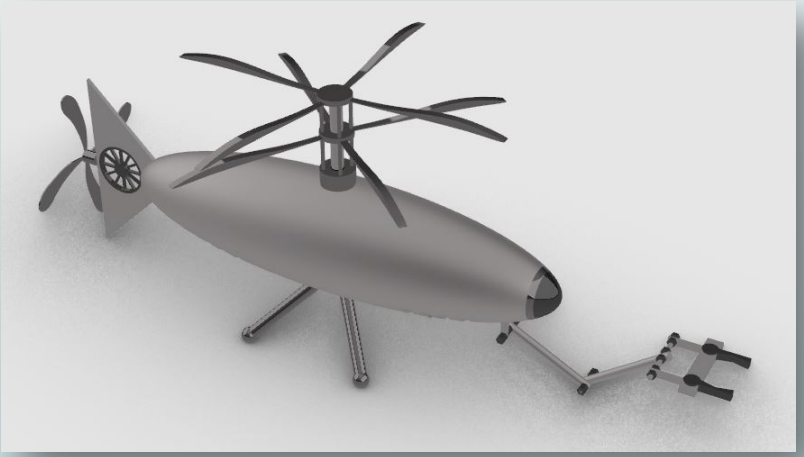

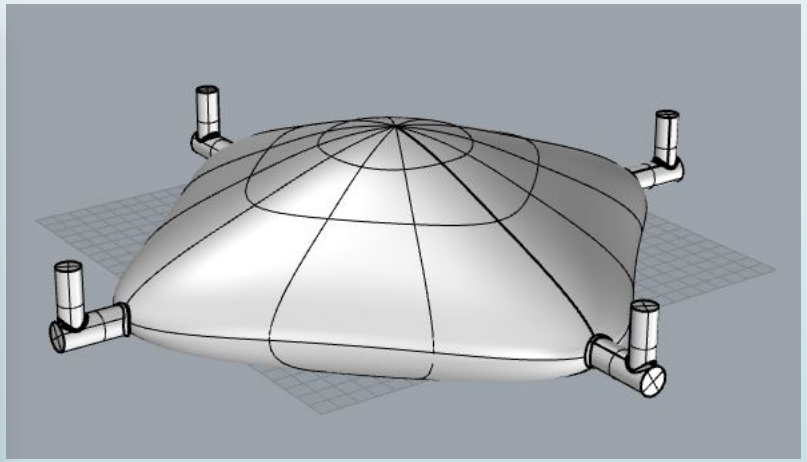

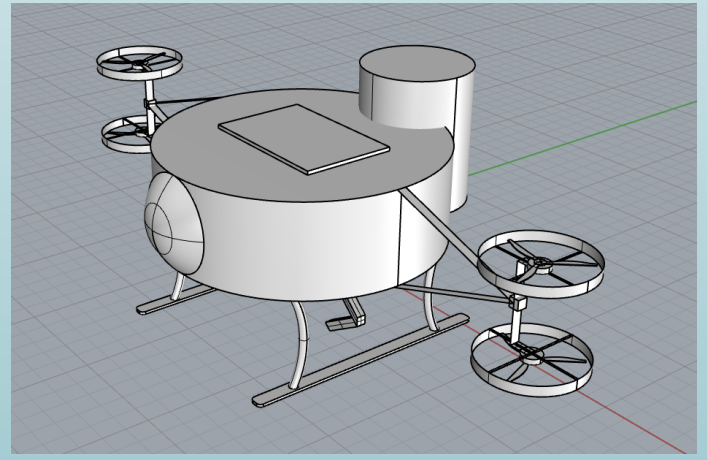

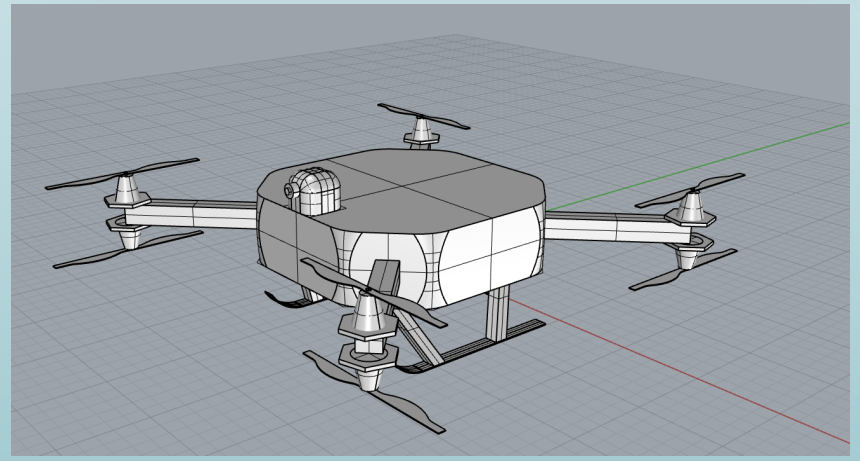

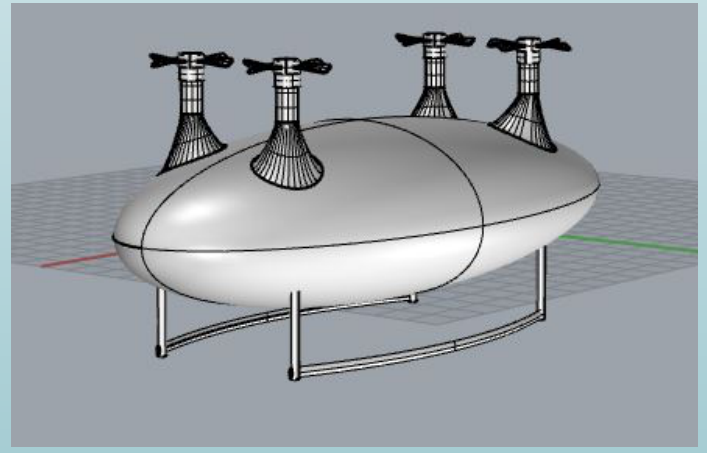

Scientific Instrumentation

- Mass Spectrometer similar to Dragonfly's (DraMS)
- Ultrasonic sensors (SONAR)
- Light Detection and Ranging (LiDAR)
- Cameras
- Geophysics and Meteorology Package similar to DraGMet
  - COTS Sensors – atmospheric pressure and temperature
  - Thermal anemometers – direction and speed of wind
  - Differential near-IR abundance – humidity

Final Design of UAV

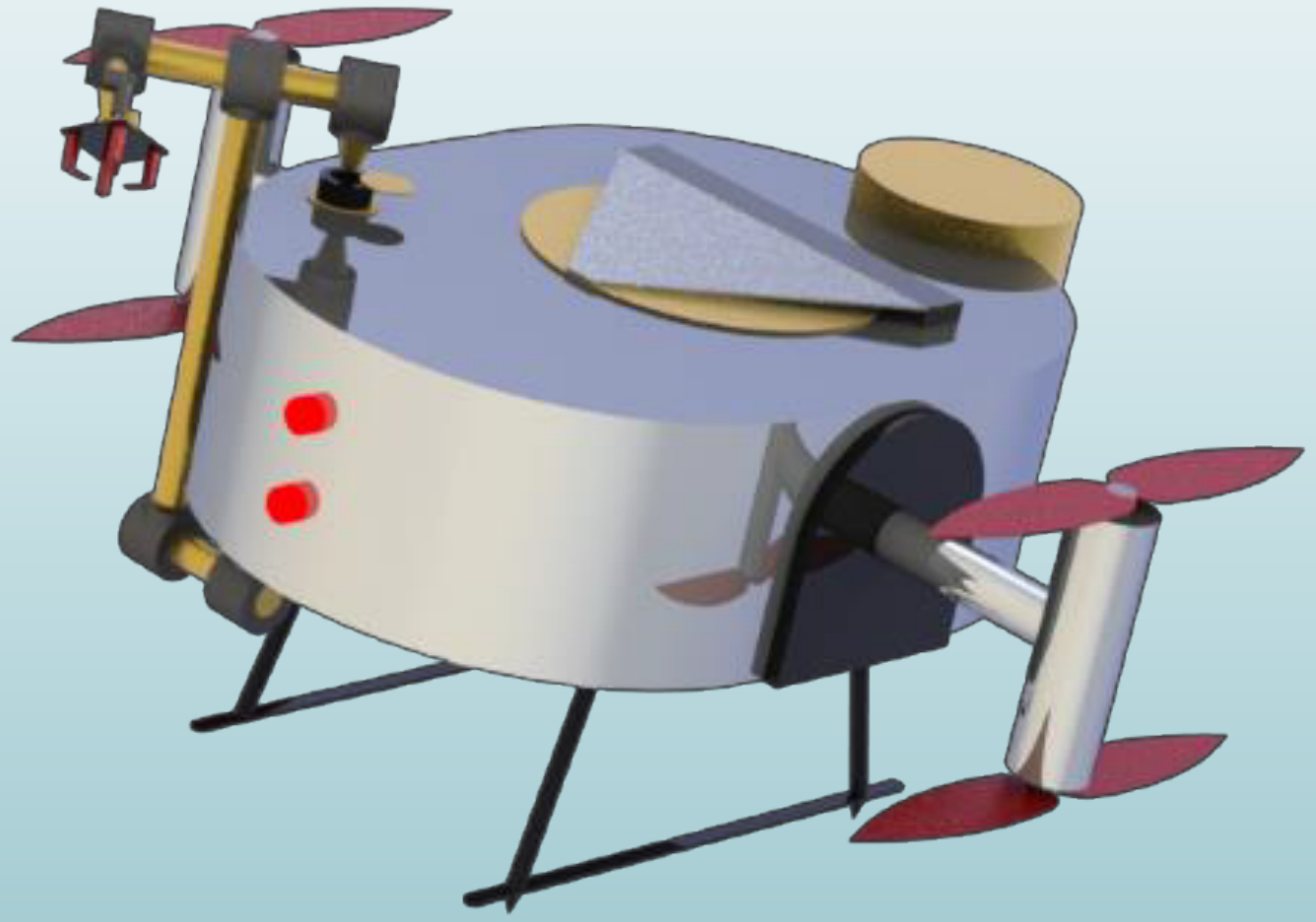

3D Printed 1/10th Scale

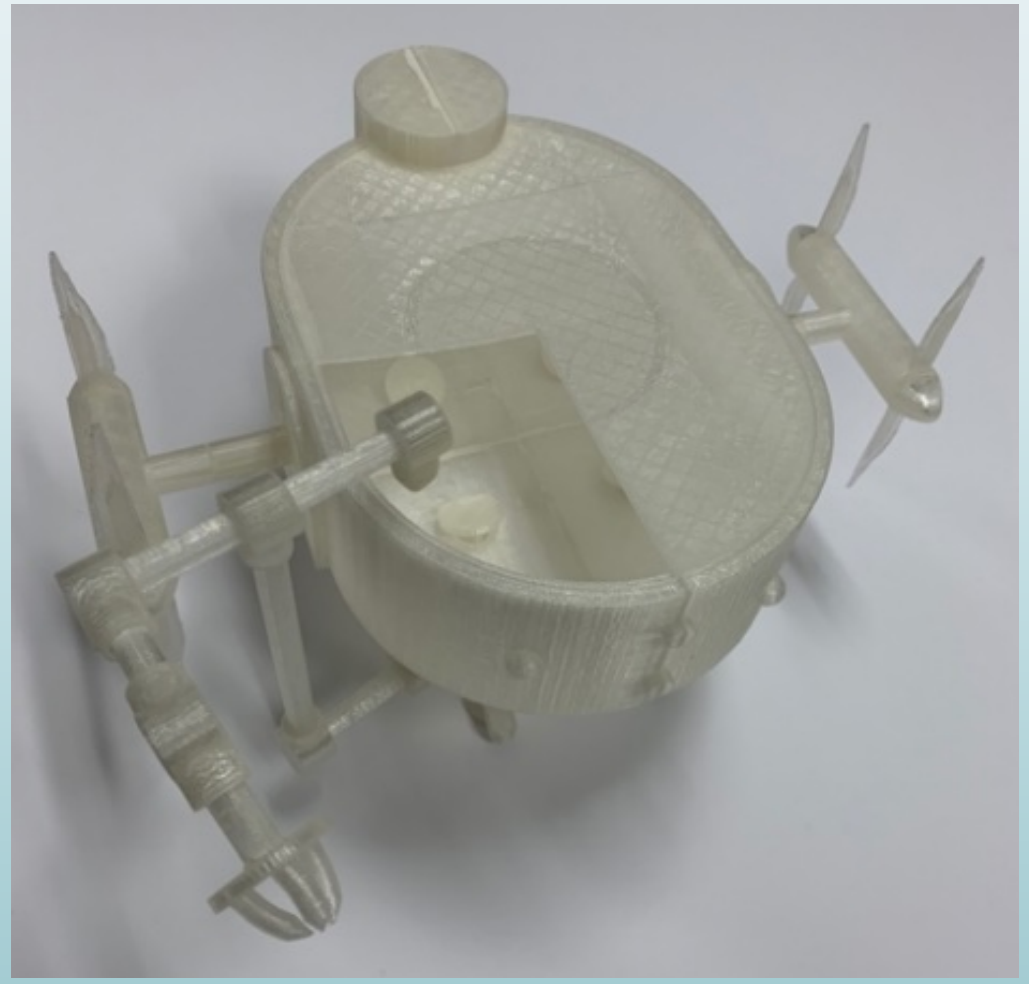

Functional Decomposition of UAV

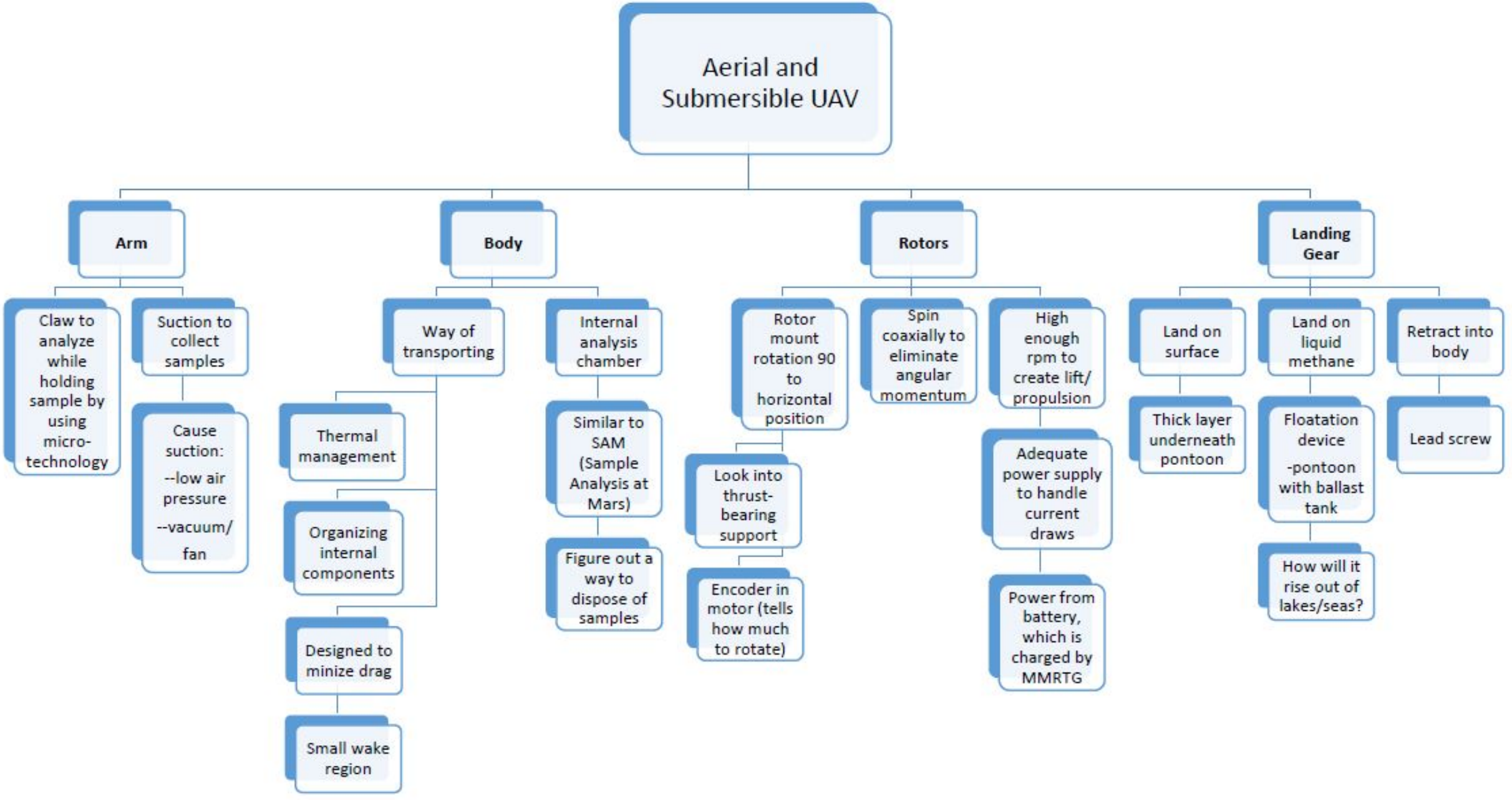
Aerial and Submersible UAV
Arm
Claw to analyze while holding sample by using micro-technology
Suction to collect samples
Cause suction:
--low air pressure
--vacuum/ fan
Body
Way of transporting
Thermal management
Organizing internal components
Designed to minize drag
Small wake region
Internal analysis chamber
Similar to SAM (Sample Analysis at Mars)
Figure out a way to dispose of samples
Rotors
Rotor mount rotation 90 to horizontal position
Look into thrust-bearing support
Encoder in motor (tells how much to rotate)
Spin coaxially to eliminate angular momentum
High enough rpm to create lift/ propulsion
Adequate power supply to handle current draws
Power from battery, which is charged by MMRTG
Landing Gear
Land on surface
Thick layer underneath pontoon
Land on liquid methane
Floatation device
-pontoon with ballast tank
How will it rise out of lakes/seas?
Retract into body
Lead screw

Mission Profile of the Four Phases

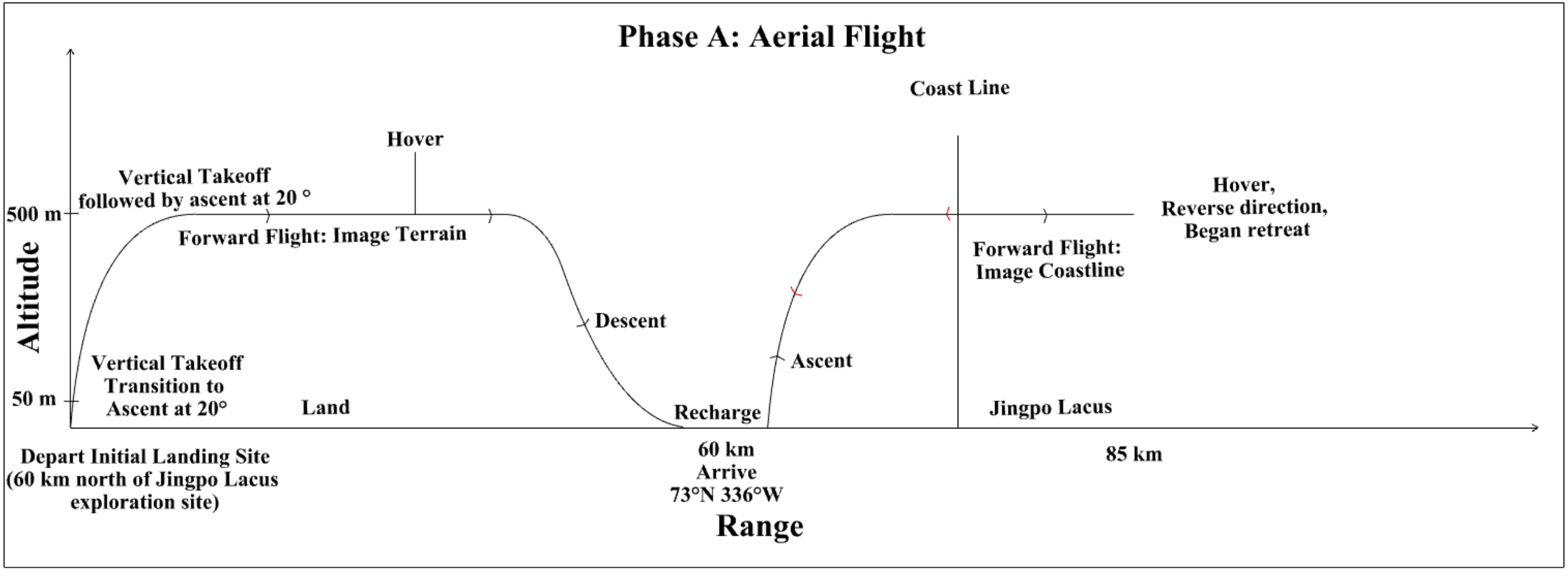
Phase A: Aerial Flight
Coast Line
Hover
Vertical Takeoff
followed by ascent at 20 °
500 m
Forward Flight: Image Terrain
Hover,
Reverse direction,
Began retreat
Forward Flight:
Image Coastline
Altitude
Descent
Ascent
Vertical Takeoff
Transition to
Ascent at 20°
50 m
Land
Recharge
Jingpo Lacus
Depart Initial Landing Site
(60 km north of Jingpo Lacus
exploration site)
60 km
Arrive
73°N 336°W
85 km
Range

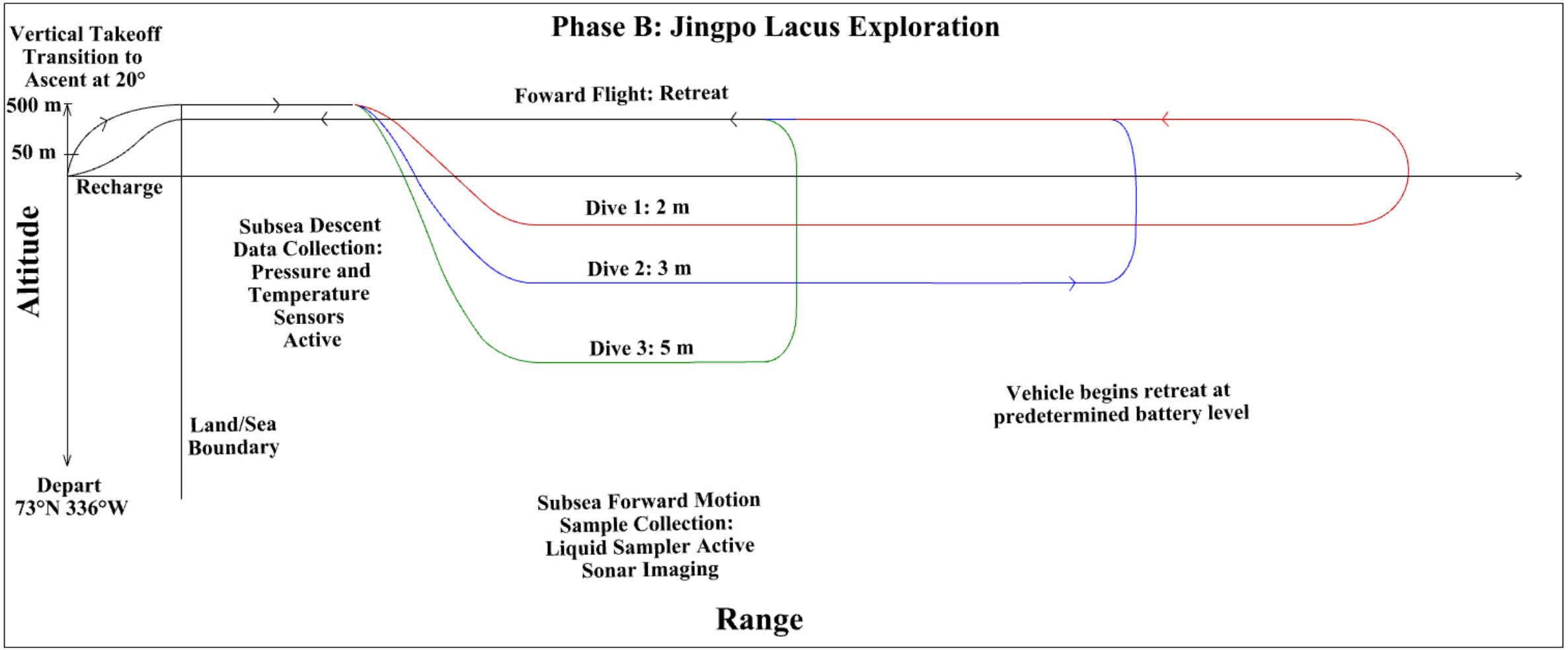
Phase B: Jingpo Lacus Exploration
Vertical Takeoff
Transition to
Ascent at 20°
500 m
50 m
Recharge
Altitude
Foward Flight: Retreat
Dive 1: 2 m
Dive 2: 3 m
Dive 3: 5 m
Subsea Descent
Data Collection:
Pressure and
Temperature
Sensors
Active
Vehicle begins retreat at
predetermined battery level
Land/Sea
Boundary
Depart
73°N 336°W
Subsea Forward Motion
Sample Collection:
Liquid Sampler Active
Sonar Imaging
Range

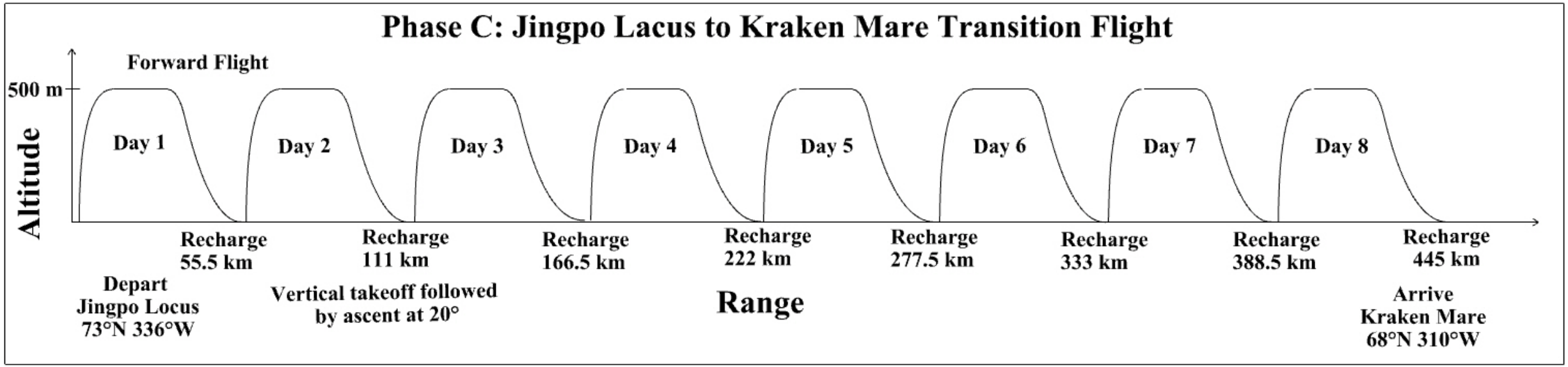
Phase C: Jingpo Lacus to Kraken Mare Transition Flight
Forward Flight
500 m
Altitude
Day 1
Day 2
Day 3
Day 4
Day 5
Day 6
Day 7
Day 8
Recharge 55.5 km
Recharge 111 km
Recharge 166.5 km
Recharge 222 km
Recharge 277.5 km
Recharge 333 km
Recharge 388.5 km
Recharge 445 km
Depart Jingpo Locus 73°N 336°W
Vertical takeoff followed by ascent at 20°
Range
Arrive Kraken Mare 68°N 310°W

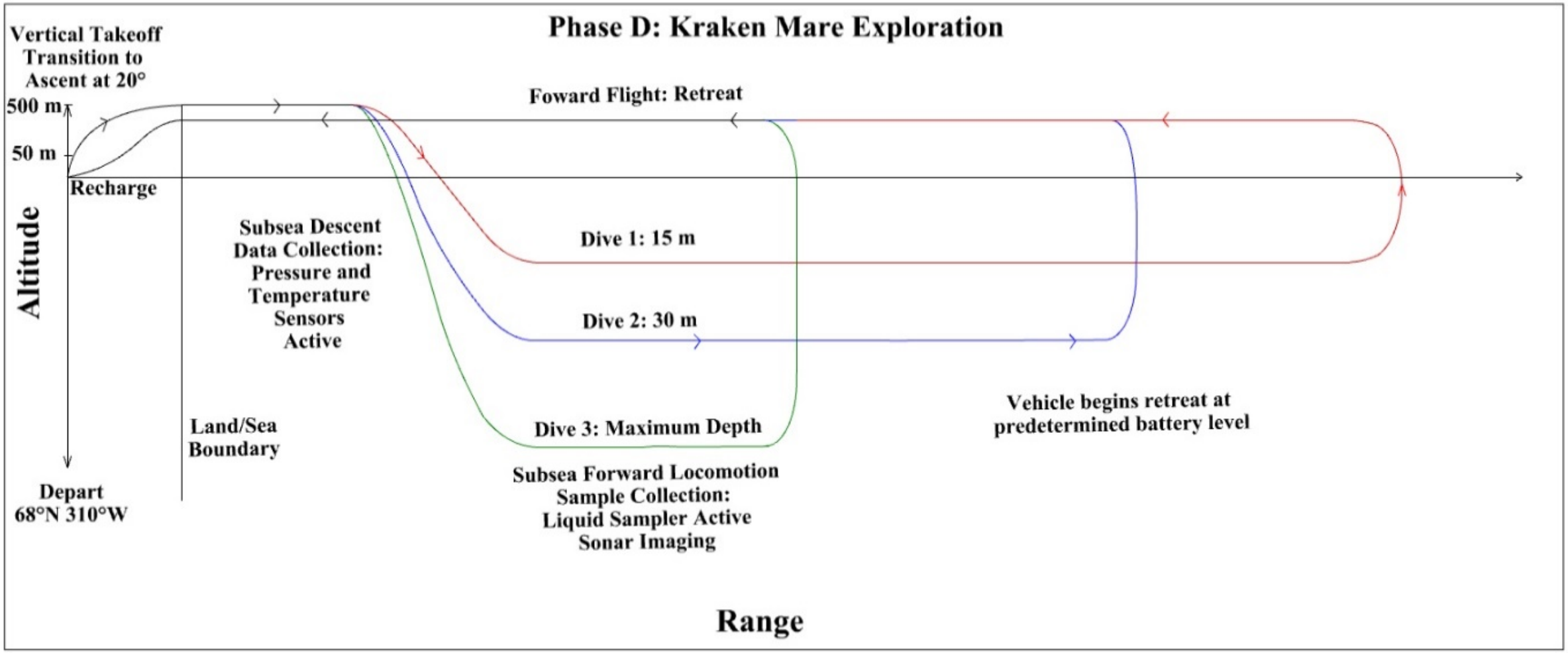
Phase D: Kraken Mare Exploration
Vertical Takeoff Transition to Ascent at 20°
500 m
50 m
Recharge
Altitude
Foward Flight: Retreat
Subsea Descent Data Collection: Pressure and Temperature Sensors Active
Dive 1: 15 m
Dive 2: 30 m
Dive 3: Maximum Depth
Land/Sea Boundary
Depart 68°N 310°W
Subsea Forward Locomotion Sample Collection: Liquid Sampler Active Sonar Imaging
Vehicle begins retreat at predetermined battery level
Range

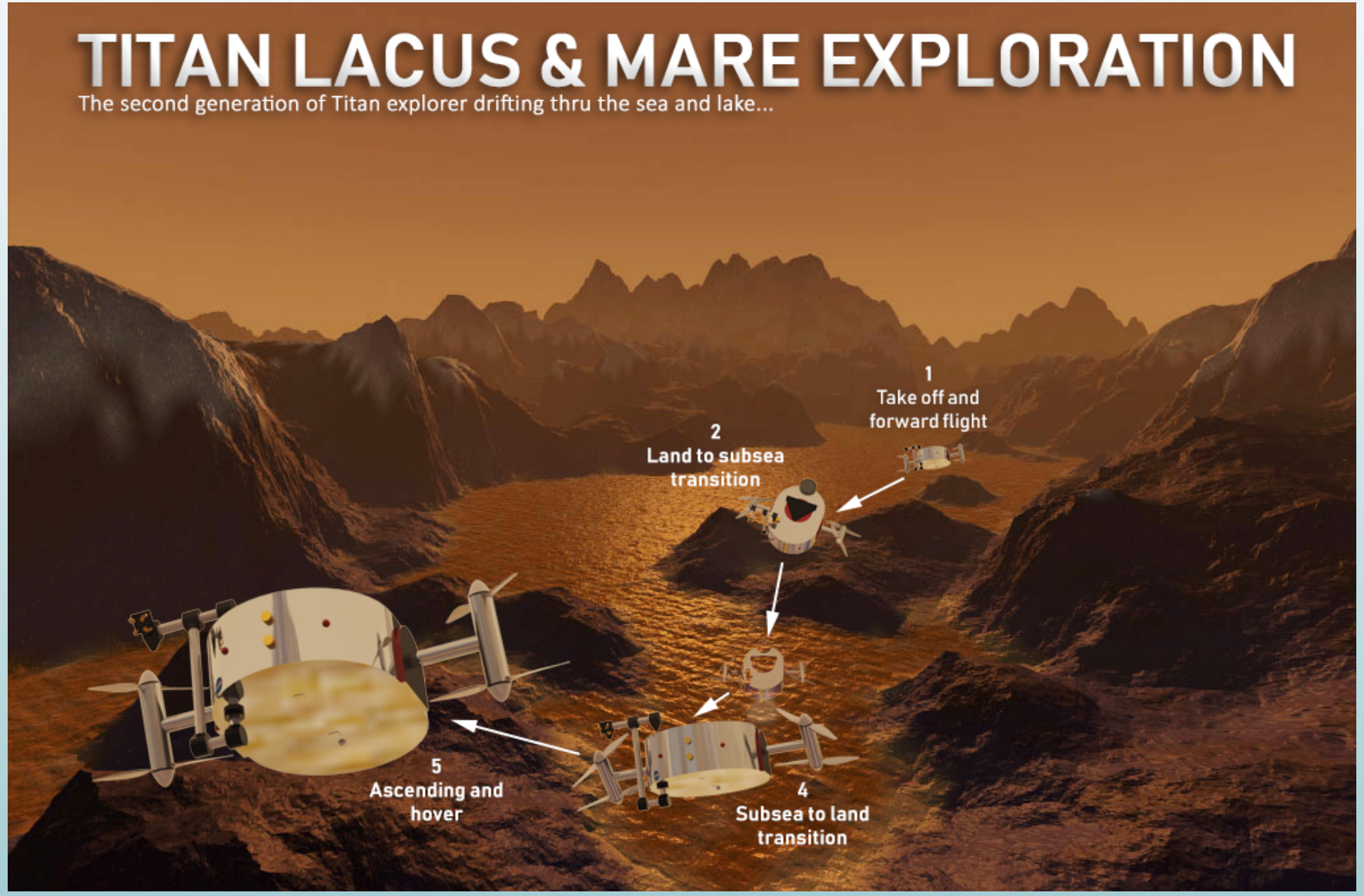
TITAN LACUS & MARE EXPLORATION
The second generation of Titan explorer drifting thru the sea and lake...
1
Take off and
forward flight
2
Land to subsea
transition
4
Subsea to land
transition
5
Ascending and
hover

Analysis of UAV

Main Body Insulation

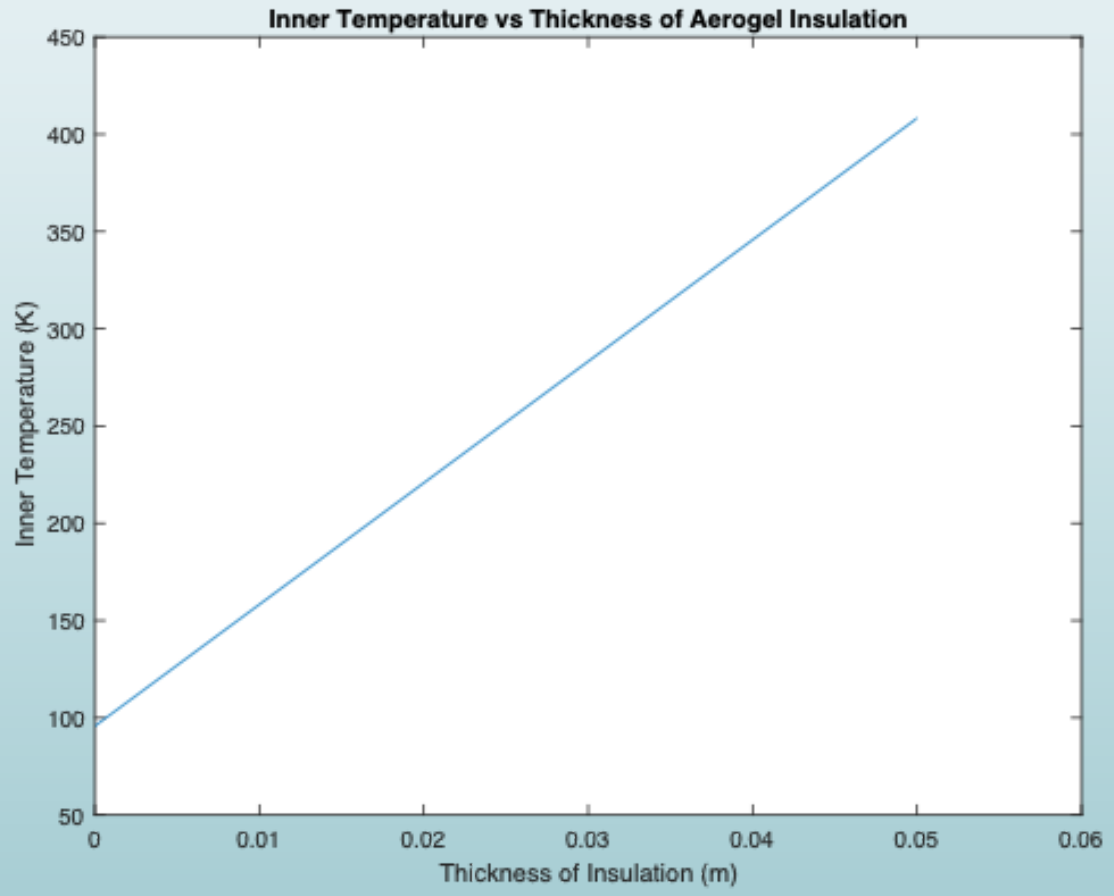

The cross section of UAV wall consists of two 2.5 cm thick layers of titanium on both sides of a layer of aerogel insulation.

Analysis using RotCFD

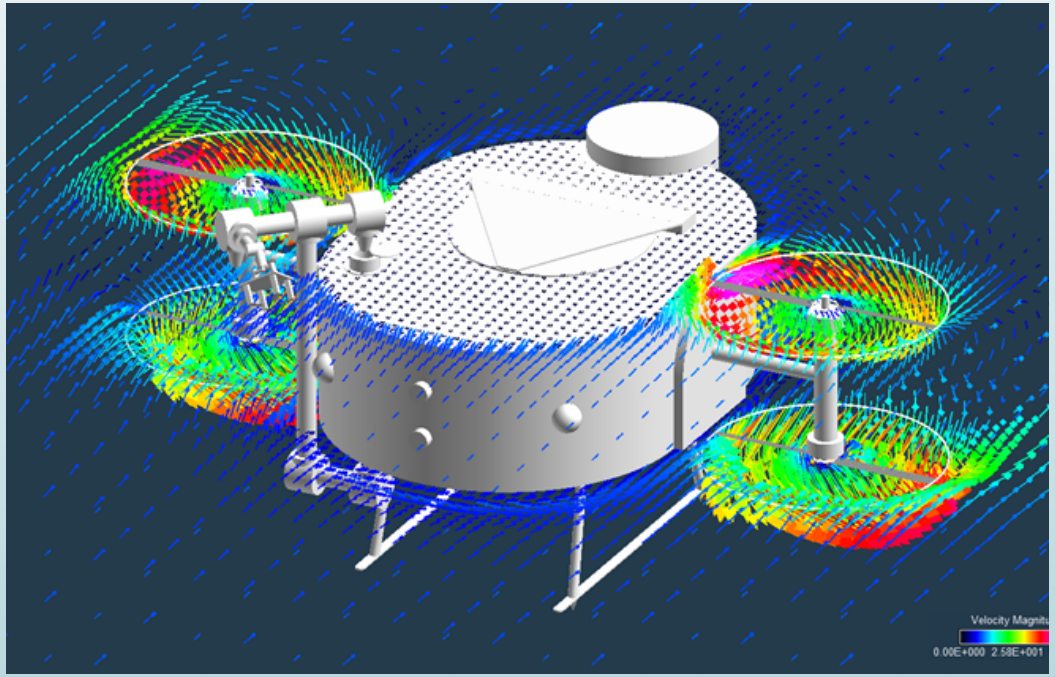

Flow visualization of UAV in aerial flight

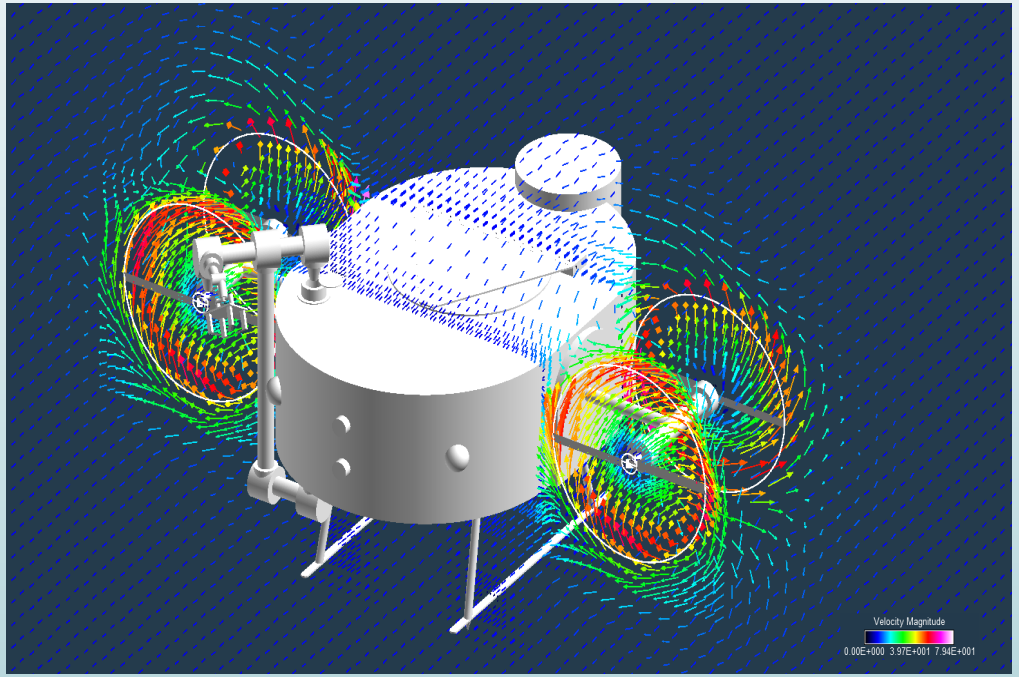

Flow visualization of UAV in subsea locomotion

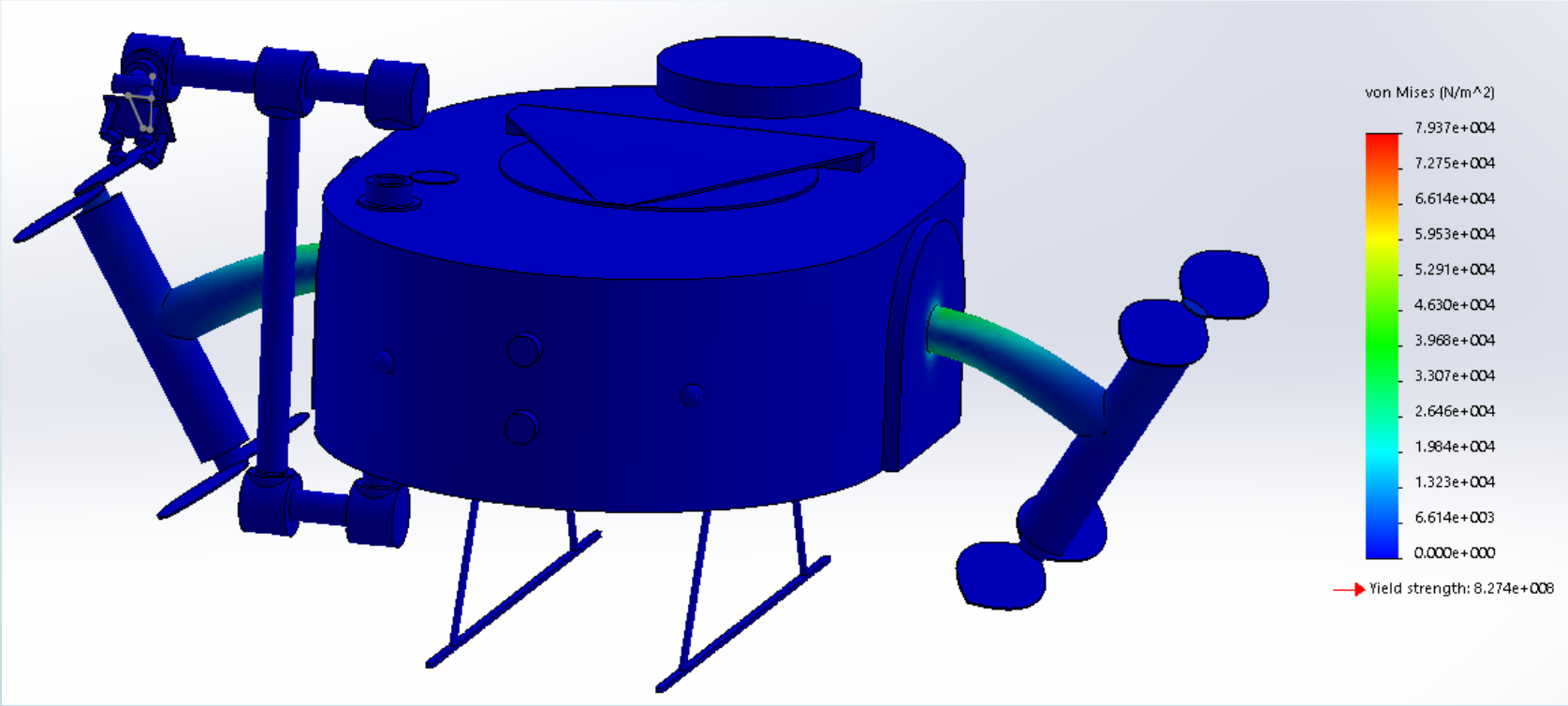

Exaggerated view of deformation from large drag force on connection of rotor hubs to fuselage

- If UAV were to suddenly accelerate upwards, it could experience 20 Newtons of drag force
- Total displacement is $1.14*10^{-6}$ m

Future Work

- Autonomous code for flight operation
- Detailed design of the individual mechanisms and motors
- Improve accuracy of the sizing of individual components and designing an effective arrangement of these components to result in an optimal CG
- Further thermal analysis
- Vibration testing to simulate dynamic events that occur during launch and powered flight

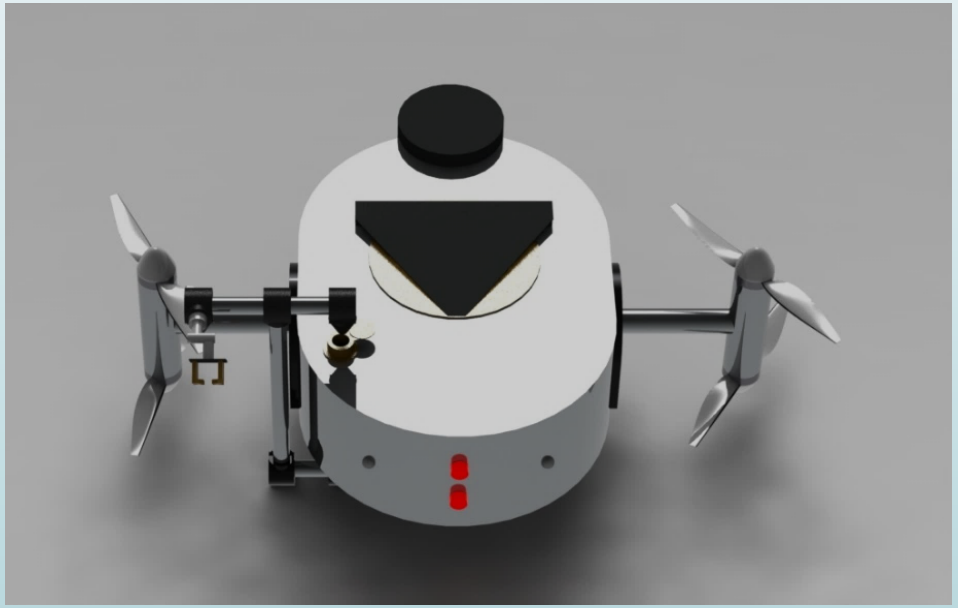

Thank You!!

Oregon Space Grant Consortium

Catherine Lanier

My Family

Larry Young

My ‘Skunkworks’ Team

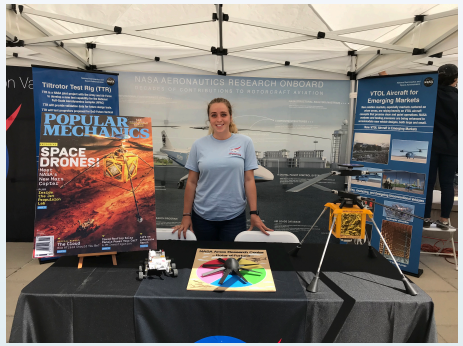

References

1. https://dragonfly.jhuapl.edu/News-and-Resources/docs/34_03-Lorenz.pdf
2. https://solarsystem.nasa.gov/resources/208/peering-through-titans-haze/?category=moons/saturn-moons_titan
3. https://photojournal.jpl.nasa.gov/figures/PIA17655_fig1.jpg
4. https://en.wikipedia.org/wiki/Titan_(moon)
5. https://www.wallpaperflare.com/surface-titan-landscape-sky-mountain-scenics-nature-wallpaper-mfkgs
6. https://www.livescience.com/37022-speed-of-sound-mach-1.html
7. https://solarsystem.nasa.gov/moons/saturn-moons/titan/in-depth/. [Accessed 31 July 2019].
8. https://en.wikipedia.org/wiki/Huygens_(spacecraft)
9. https://www.nasa.gov/press-release/nasas-dragonfly-will-fly-around-titan-looking-for-origins-signs-of-life